Relevant Knowledge

Properties and Testing of Materials

I. Properties of Materials

Before using any kind of material, we must have knowledge of its unique characteristics so as to make full use of it. Therefore, we should consider the physical and mechanical properties of the material before using it.

1. Physical Properties

The characteristics of a material acting as matter are called its physical properties. These properties do not change due to external forces. For example, no matter how much heat energy is used to melt ice, its melting point always stays at 0℃. Common physical properties of materials include density, melting point, boiling point, coefficient of linear expansion, thermal conductivity and resistivity. The following table lists the definitions and examples of some physical properties.

Physical property	Definition	Examples
Density	Mass per unit volume	Density of iron is about 7.9 g/cm^3 Density of aluminium is about 2.7 g/cm^3 Density of water is 1 g/cm^3 Density of oil is about 0.8 g/cm^3 Density of wood is about 0.6 g/cm^3
Melting point	Temperature at which a substance changes from solid to liquid state	Melting point of copper is 1083℃ Melting point of aluminium is 660℃ Melting point of tin is 180℃
Boiling point	Temperature at which a substance changes from liquid to gas state	Boiling point of aluminium is 2467℃ Boiling point of water is 100℃ Boiling point of 95% alcohol is 78℃
Thermal conductivity	The ability to conduct heat energy	Silver has the highest thermal conductivity among metals. Plastics are commonly used materials with poor thermal conductivity.
Electrical conductivity	The ability to conduct electricity	Silver has the highest electrical conductivity among metals. Plastics are commonly used materials with poor electrical conductivity.
Coefficient of linear expansion	The ratio of the increase in length per unit of a substance when the temperature rises by 1℃	Coefficient of linear expansion of aluminium is 23×10^{-6} ℃$^{-1}$ Coefficient of linear expansion of iron is 12×10^{-6} ℃$^{-1}$ Coefficient of linear expansion of glass is about 0.5×10^{-6} ℃$^{-1}$ to 8×10^{-6} ℃$^{-1}$

Physical properties of materials

2. Mechanical Properties

Mechanical properties of a material describe how the material in its solid state reacts to forces. Common mechanical properties include tensile strength, compression strength, ductility, malleability, toughness, hardness and stiffness.

(a) Tensile Strength

Tensile strength of a material is its ability to resist deformation when it is being stretched. For example, the material used to produce the wire rope of a crane must have very high tensile strength.

Tensile strength

(b) Compression Strength

Compression strength of a material is its ability to resist deformation when it is being compressed. For example, steel is often used to produce the casing of motor vehicles as it can resist the compressive force created by an accidental impact.

Compression strength

(c) Ductility and Malleability

Ductility is the ability of a material to retain its strength without forming fracture when it deforms under tensile stress. For example, both copper and tin have high ductility – they can be stretched into copper wires and tin wires.

A material with high ductility: tin wire

A material with high malleability: aluminium can

Besides, some other materials demonstrate the property of malleability. Malleability is the ability of a material to retain its strength without forming fracture when it is deformed by hammering or pressing. For example, both gold and aluminium have high malleability such that very thin gold foil can be manufactured by rolling and aluminium cans be manufactured by stamping.

(d) Toughness

Toughness is the ability of a material to resist cracking when being hammered or twisted. For example, steel has high toughness – steel plates can withstand severe impacts.

(e) Hardness

Hardness is the ability of a material to resist cutting, pressing and wearing by external forces. For example, diamond is the hardest material which can be used to cut other materials. A material with high hardness often has high brittleness, suggesting that it will break more easily. 。

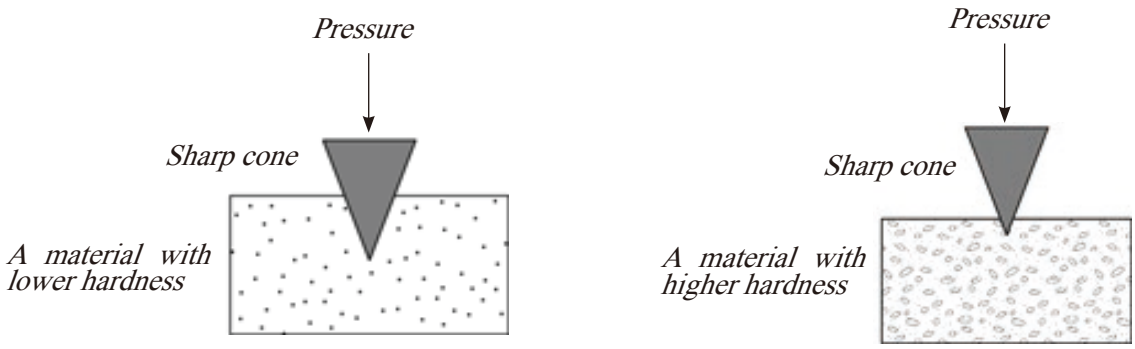

Testing the hardness of materials by the same sharp cone

(f) Stiffness

Stiffness is the ability of a material to resist bending by moment of forces. For example, a diving board bends easily while a gymnastics balance beam does not bend at all. Thus, a diving board has lower stiffness when compared to a balance beam. 。

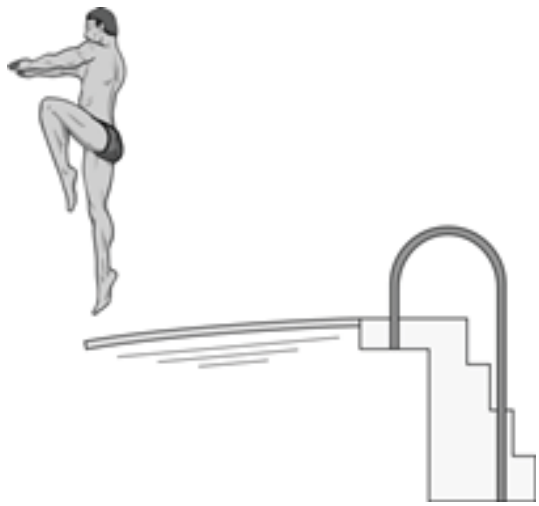

A diving board has lower stiffness

A balance beam has higher stiffness

Relevant Knowledge

II Testing of Materials

We must understand the various properties of a material in order to use it appropriately. Testing of materials is the process of identifying the properties of materials through objective methods. Different kinds of tests can be used to find out the different properties of materials such as hardness, tensile strength, stiffness and toughness. In this section, we will introduce some simple testing methods that can be conducted in schools.

1. Testing of Electrical Conductivity

Electrical conductivity measures the ability of a material to allow the passage of an electric current. A simple way to test electrical conductivity is to measure the resistance of a material using a multimeter.

- The resistances are lower for materials with high electrical conductivity, for instance, copper and gold.
- The resistances are higher for materials with low electrical conductivity, for instance, plastics and wood. They are good insulators.

Multimeter

2. Testing of Hardness

The hardness of a material can be tested by using a steel cone with a specific weight. From a particular height, the steel cone is dropped freely onto the surface of a material. The cone centre will leave a hole on the specimen. The smaller the diameter of the hole, the harder the cone centre can pierce into the material, i.e. the material has a higher hardness.

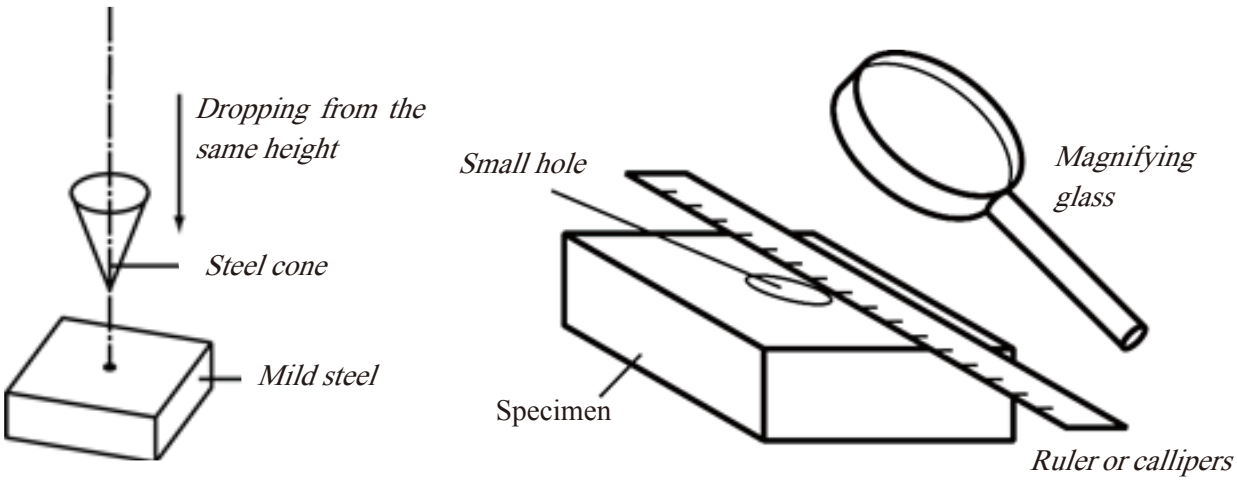

Testing the hardness of a material using a steel cone

3. Testing of Tensile Strength

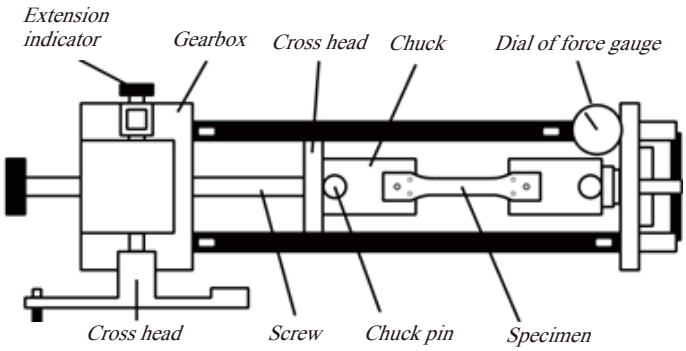

Tensile strength of a material can be tested by a tensometer

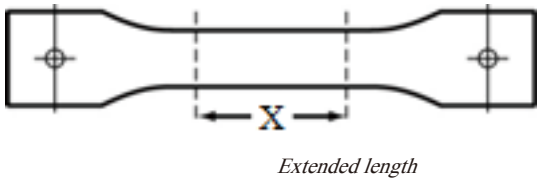

Specimen

Relevant Knowledge

A tensometer can be used to test the tensile strength of a material. To operate, cut the material (such as aluminium) to the shape of a specimen and measure its cross-sectional area and its original length. Load the specimen between the grips of the instrument. Turn the handle to stretch the specimen. From the extension indicator of the instrument, we can read the extension of the specimen elongated; from the dial of the force gauge, we can read the stretching force applied. Keep on turning the handle and, from time to time, record the force applied and the length of the specimen elongated.

The tensile properties of a material can be illustrated by its stress-strain diagram. Stress is the force a sample material experiencing per unit area, which can be expressed by

$$\text{stress} = \frac{\text{force}}{\text{cross-sectional area}}$$

Strain is the ratio of the extension when a sample material is being stretched with the original length of the sample material, which can be expressed by

$$\text{strain} = \frac{\text{extension}}{\text{original length}}$$

The following figure shows the condition when a material is being stretched.

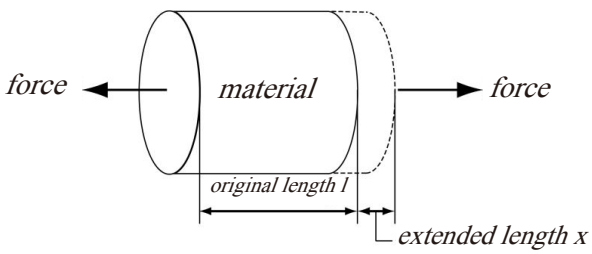

A material being stretched

Let the weight of a rings gymnast be 75 kg and the total cross-sectional areas of the two straps be 5 cm2. Then the stress the straps experience is

$$\text{stress} = \frac{\text{force}}{\text{cross-sectional area}} = \frac{75\text{kg}}{5\text{cm}^2}$$

The following figure shows the stress-strain diagram of mild steel. In the figure, point A is called the elastic limit, which is the maximum stress a material can sustain without experiencing permanent deformation. If we remove the load prior to the elastic limit, a stage known as the elastic range, the material will return to its original length. Beyond the elastic range, known as the plastic range, an extension deformation becomes irreversible. In this range, even though the length of extension of the mild steel object will reduce when the load is removed, it will not resume its original length. This suggests that a transformation in the internal structure of the material has taken place. At point B, called the yield strength, the object will grow in length even if the load is not increased. Though not all materials possess an elastic yield point, mild steel shows this characteristic.

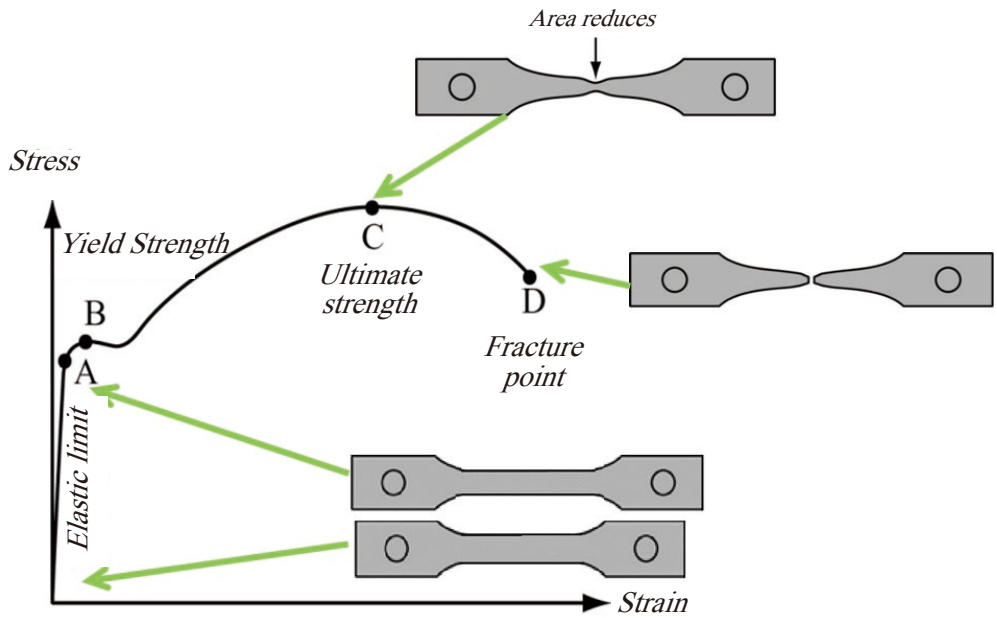

Stress-strain diagram of mild steel

Point C represents the maximum stress, also known as the ultimate strength. At this point, the cross-sectional area at the middle part of the specimen will reduce significantly, forming a narrower section. Beyond point C, the load required to extend the length of the material will reduce. At point D, the specimen will break at the position where its cross-sectional area has become smaller.

Different materials have different tensile properties. Ductile materials undergo a large extent of plastic deformation before breaking while brittle materials hardly show any plastic deformation.

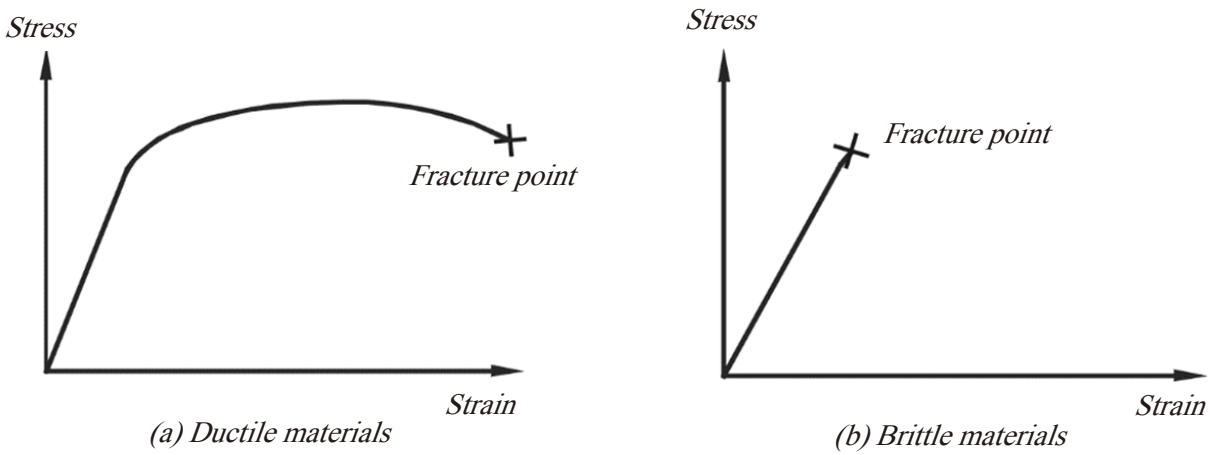

Strain-stress diagram

Lesson Activity

1. Testing Electrical Conductivity

An analogue multimeter

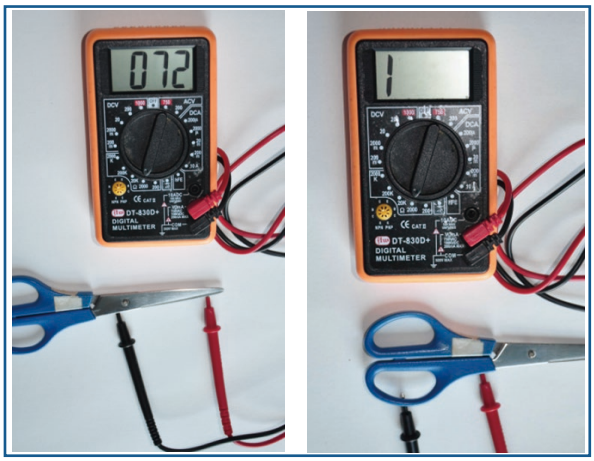

A digital multimeter

Procedures:

1. Choose a multimeter (either analogue or digital).
2. Choose appropriate materials as the specimens.
3. Place the two test probes on the specimens with a distance of about 5 cm for measurement.
4. Switch the dial to an appropriate resistance multiplication setting (the pointer should stay in the middle of the scale for an analogue multimeter / the reading should be non-zero for a digital multimeter).
5. Record the measurements (the last two materials can be specified by teachers or chosen by students, e.g., paper, rock or guitar strings with different thicknesses).
6. Arrange the materials in descending order of their electrical conductivity.

Use a multimeter to test the electrical conductivity of materials

Material	Human finger	Scissors' blade	Scissors' handle		
Resistance multiplication setting					
Reading					
Resistance = reading × multiple					

List the materials in descending order of electrical conductivity (ascending order of resistance) and suggest one use for each of them.

Material	Suggested use

Relevant Knowledge

2. Testing Hardness

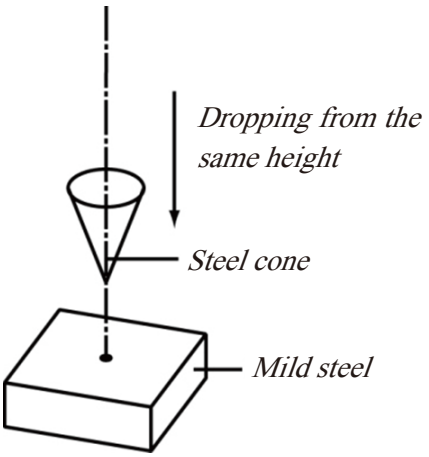

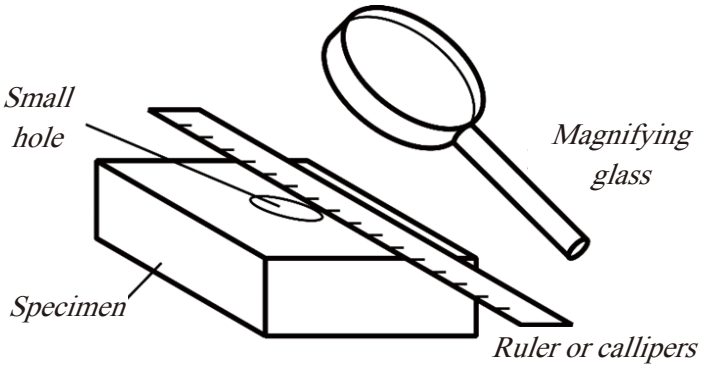

Procedure:

1. Choose a steel cone or use a centre punch to substitute the cone shown in the above figure.
2. Choose appropriate materials as the specimens.
3. Drop the steel cone from the same height or use similar amount of force to hammer the centre punch once.
4. Measure the sizes of the small holes.
5. Record the measurements (the last two materials can be specified by teachers or chosen by students).
6. Arrange the materials in descending order of their hardness.

Use a steel cone / centre punch to test the hardness of materials

Material	Aluminium sheet	Iron sheet	Wooden board		
Diameter of the small hole					

List the materials in descending order of hardness (ascending order of the diameters of the small holes) and suggest one use for each of them.

Material	Suggested use

3. Testing Tensile Strength

a. Using an instrument

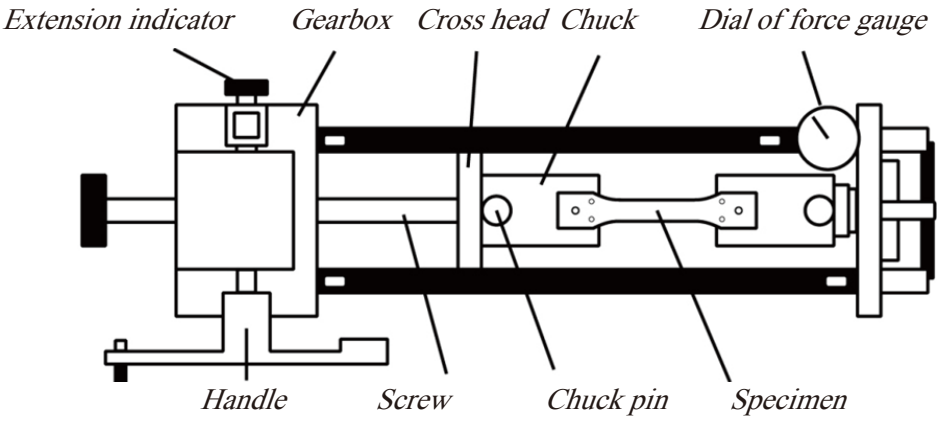

Procedure:

1. Choose a tensometer.
2. Choose appropriate materials as the specimens.
3. Load the specimens between the grips of the tensometer.
4. Turn the handle.
5. Record the measurements (the last two materials can be specified by teachers or chosen by students, e.g. acrylics, cross-grained wood strips, straight-grained wood strips).
6. Arrange the materials in descending order of their tensile strength.

Use a tensometer to test the tensile strength of materials

Material	Iron	Aluminium	Copper		
Force applied before breaking					
Cross-sectional area of the specimen					
Stress (tensile strength) = force cross-sectional area					

List the materials in descending order of tensile strength and suggest one use for each of them.

Material	Suggested use

b. Using simple equipment

Procedures:

1. As shown in the figure, fix a section of a L-shape bar on a bench vice.
2. Choose appropriate materials as the specimens.
3. Cut each specimen into the size of 200 mm × 25 mm.
4. Draw two markings with a distance of 100 mm on the middle portion of each specimen.
5. Protected by padding, clamp the upper end of each specimen on the extension part of the L-shape bar tightly.
6. Also with the protection of padding, clamp the lower end of each specimen tightly and hang a heavy object on it.
7. Increase the weight (you can use weights or a small bucket for putting in heavy objects with known weights).
8. Measure the distance between the two 100 mm markings for each specimen.
9. Record the measurements (the last two materials can be specified by teachers or chosen by students, e.g. rubber bands, cross-grained wood strips, straight-grained wood strips).

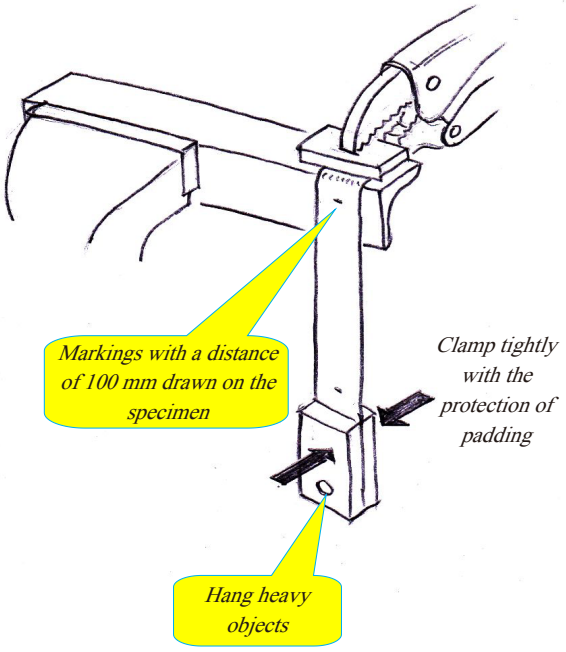

Use simple equipment to test the tensile strength of materials

Material	Paper	Plastic bag	Nonwoven fabric		
Total weight of heavy objects before breaking					
Distance between the two markings before breaking					
Which of the following figures, A or B, describes the stress-strain relationship of the material?					

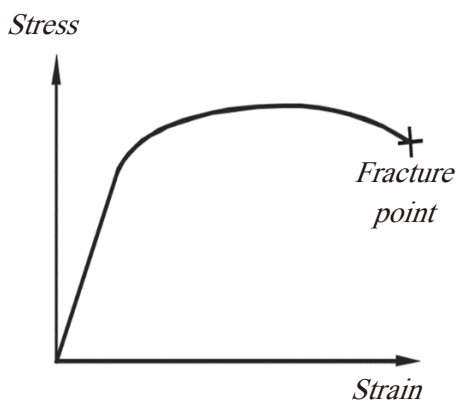

Fig A

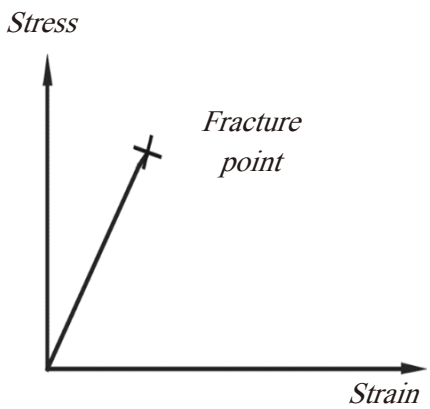

Fig B

Relevant Knowledge

III Glossary of Terms

Physical property	物理特性	Tensile strength	拉力強度
Mechanical property	機械特性	Compression strength	壓縮強度
Density	密度	Ductility	延性
Melting point	熔點	Malleability	展性
Boiling point	沸點	Stiffness	剛強度
Coefficient of Linear expansion	線脹系數	Stress	應力
Thermal conductivity	導熱性	Strain	應變
Electrical conductivity	導電性	Brittleness	脆

IV Relevant Information

	Website	Content
1	http://resources.hkedcity.net/resource_detail.php?rid=1405520825	Material testing
2	http://www.youtube.com/watch?v=D8U4G5kcpcM	Tensile testing machine
3	http://www.youtube.com/watch?v=B_GVw47glL0	Tensile testing machine for paper bags

Exercise

Relevant Knowledge

1. Define for each of the following physical properties.

(a) Density (b) Melting point (c) Boiling point (d) Coefficient of linear expansion

2. (a) What does it mean by 'mechanical properties' of materials?

(b) Explain briefly each of the following mechanical properties of materials.

(i) Tensile strength (ii) Ductility (iii) Hardness

3. (a) Sketch the stress-strain diagram of mild steel when it is being stretched. Put down the following labels on the diagram appropriately.

(i) Elastic limit (ii) Yield strength (iii) Ultimate strength (iv) Fracture point

(b) Sketch the stress-strain diagram for each of the following types of materials.

(i) Brittle materials (ii) Ductile materials

4.

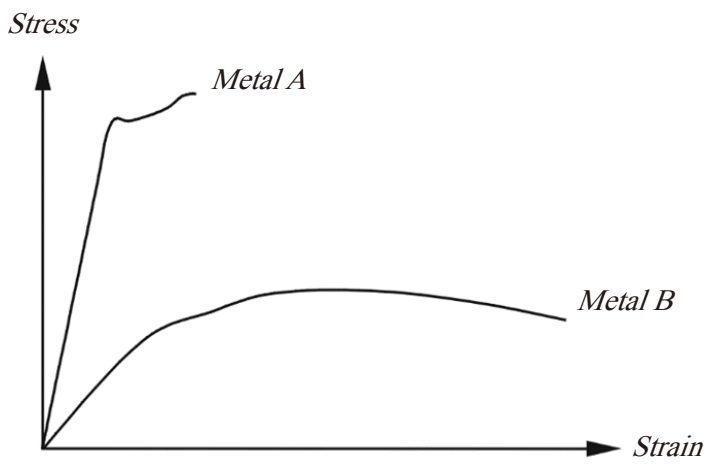

The above figure shows the stress-strain diagram of metals A and B.

(a) Compare the ductility of the two metals.

(b) Which metal will you choose to manufacture thin, seamless pipes? Explain your answers briefly.

Relevant Knowledge

5. Students have tested the electrical conductivity, hardness and tensile strength of materials in the lesson activity. When choosing a material for manufacturing a product, what is the most important property to consider? Why? ?

Product to be made	The most important property to consider	Reason
Cutter		
Cable		
Electric wire		
Shaver		
Hoist cable of a lift		
Contact point of a switch		

Case Study – Properties of Materials
(Electric Plugs)

Case Study Guidelines

1. Objectives

1. Analyse the consideration factors of designing and manufacturing a 13A electric plug.
2. Appreciate the effort made by designers.
3. Take into account the limitations of manufacturers.

2. On completion of the project activity, students should be able to

1. carry out analysis regarding a specific aspect of a product;
2. present analysis results with the use of communication skills.

3. Situation

Most electric appliances are connected to the power source through electric plugs. A poorly designed or manufactured plug can lead to accidents such as electric shock and fire. Thus, designing and selecting the materials for an electric plug have to be very careful.

4. Summary of Activity

Dismantle a 13A electric plug commonly used in Hong Kong and investigate the materials used for its different parts. Study also its design to see how it protects users while achieving the purpose of connecting the appliance to the power source.

5. Recommended Time

2 teaching periods × 40 minutes (total 80 minutes)

6. Required Materials

1. 13A electric plug commonly used in Hong Kong
2. 20 cm long wire (for safety consideration, the wire will not be connected to the plug)
3. Philip's type screwdriver
4. 13A socket
5. Worksheet

7. Activity Content

1. Properties of Materials (I) Allow the plug to fall freely from a height of 30 cm to the floor. Observe the results.	Allowing the plug to fall freely, the result was that it _____, it has a _____ toughness and it has a _____ rigidity. It did not deform.
2. Properties of Materials (II) A. Pull out one of the pins and use it to scratch the surface of the plug gently. Observe the results. B. Use a Philip's type screwdriver to scratch the pins and the surface of the plug gently. Observe the results.	A. Using a pin to scratch the surface of the plug gently, the result was _____ _____. The hardness of the pin is _____ than that of the surface of the plug. B. Using a Philip's type screwdriver to scratch the pins and the surface of the plug gently, the result was ____ _____. The hardness of the Philip's type screwdriver is _____ than that of the pins and the surface of the plug.
3. Properties of Materials (III) The pin of the plug is made of copper and the case of the plug is made of plastic. What is the rationale behind the choice?	Since the electrical conductivity of copper is _____ while the electrical conductivity of plastic is _____ , the plug can be connected to the power supply effectively while the users will not _____.
4. Properties of Materials (IV) The fuse inside the plug will provide protection when there is an excessive current. What are its characteristics?	A fuse is made of material with low _____. _____ will be produced when there is a flow of current. Excessive current will produce heat that the fuse cannot stand and the fuse will _____, thus providing protection.
5. Properties of Materials (V) Measure the length of the wire. Pull the wire gently and measure again. Observe the results.	Results of the two measurements were _____. The tensile strength of the wire is _____.

Extended Section (Teachers will determine whether to continue the remaining parts of the investigation by considering the time allowed)

6. Exterior Design (I) A. Insert the plug into the socket. Is it easy to make a mistake? B. Is the insertion easy? (Is a large force required? Do you need to press with your whole strength to insert the plug? Do you need assistance from the others?)	A. It was _____ to make a mistake. B. The force required to insert the plug was _____ _____ _____ _____
7. Exterior Design (II) A. Pull out the plug slightly. Is it easy for your fingers to come into contact with the metal parts of the plug? (What design of the plug prevents you from doing that? Why is it designed in this way?) B. Which part of the plug do you use to pull the plug out? How is that part designed to facilitate applying force for unplugging?	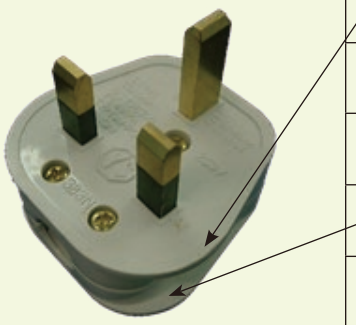 A: B:
8. Exterior Design (III) A. With a Philip's type screwdriver, withdraw the screw in the middle of the plug. B. With only three pins, why is the shape of the plug more like a square?	A. It was _____ to open up the plug. This design facilitates _____ _____. B. _____ _____ _____
9. Others A. What is the fabrication method of plugs? There are a total of six screws. What are their functions respectively??	A. The fabrication method of plugs is_____. B. The functions of the screws are_____ _____ _____ _____ _____

Suggested Answers

1. Properties of Materials (I) Allow the plug to fall freely from a height of 30 cm to the floor. Observe the results.	Allowing the plug to fall freely, the result was that it __**remained intact**_, it has a __**high**__ toughness and it has a __**high**__ rigidity. It did not deform.
2. Properties of Materials (II) A. Pull out one of the pins and use it to scratch the surface of the plug gently. Observe the results. B. Use a Philip's type screwdriver to scratch the pins and the surface of the plug gently. Observe the results.	A. Using a pin to scratch the surface of the plug gently, the result was __**scratches were left on the surface of the plug**__. The hardness of the pin is __**higher**_ than that of the surface of the plug. B. Using a Philip's type screwdriver to scratch the pins and the surface of the plug gently, the result was _**scratches were left on both the pins and the surface of the plug**__. The hardness of the Philip's type screwdriver is __**higher**_ than that of the pins and the surface of the plug.
3. Properties of Materials (III) The pin of the plug is made of copper and the case of the plug is made of plastic. What is the rationale behind the choice?	Since the electrical conductivity of copper is _**high**_ while the electrical conductivity of plastic is _**low**_ , the plug can be connected to the power supply effectively while the users will not __**get an electric shock**__.
4. Properties of Materials (IV) The fuse inside the plug will provide protection when there is an excessive current. What are its characteristics?	A fuse is made of material with low _**melting point**_. __**Heat**__ will be produced when there is a flow of current. Excessive current will produce heat that the fuse cannot stand and the fuse will __**melt**_, thus providing protection.
5. Properties of Materials (V) Measure the length of the wire. Pull the wire gently and measure again. Observe the results.	Results of the two measurements were __**the same**__. The tensile strength of the wire is __**high**__.

6. Exterior Design (I) A. Insert the plug into the socket. Is it easy to make a mistake? B. Is the insertion easy? (Is a large force required? Do you need to press with your whole strength to insert the plug? Do you need assistance from the others?)	A. It was __**not easy**__ to make a mistake. B. The force required to insert the plug was ___**not too much and the action could be completed with just one hand; assistance from the others was not required**__.
7. Exterior Design (II) A. Pull out the plug slightly. Is it easy for your fingers to come into contact with the metal parts of the plug? (What design of the plug prevents you from doing that? Why is it designed in this way?) B. Which part of the plug do you use to pull the plug out? How is that part designed to facilitate applying force for unplugging?	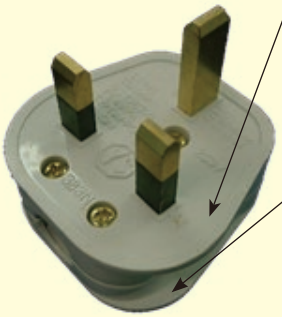 **A. This part bulges such that fingers will not come into contact with the metal parts easily** **B. This part is made to be a depression such that force can be applied more effectively when unplugging**
8. Exterior Design (III) A. With a Philip's type screwdriver, withdraw the screw in the middle of the plug. B. With only three pins, why is the shape of the plug more like a square?	A. It was _**easy**__ to open up the plug. This design facilitates _**maintenance**__. B. __**Because there is also a fuse in the plug and this shape fits the grip of hand better**__.
9. Others A. What is the fabrication method of plugs? B. There are a total of six screws. What are their functions respectively?	A. The fabrication method of plugs is _**injection moulding**_. B. The functions of the screws are _**one for locking the cover, three for securing the three wires to the pins and two for fastening the cable to the plug**__.